CASE REPORTS

HIGHLIGHTS OF SCIENCE AND TECHNOLOGY IN CONNECTICUT
Published by the Connecticut Academy of Science and Engineering • Vol. 15, No. 2, 2000

THE SCIENCE OF COMBUSTION IN CONNECTICUT

Lisa Pfefferle has been known to sit and watch flames for hours at a time. She may find flames captivating, but she is not just absorbed by the dance of colors in front of her. What really interests her in flames are the pollutants being emitted as they burn.

Pfefferle is a professor of chemical engineering at Yale University, and is one of several combustion scientists in Connecticut trying to draw a clearer picture for the world of how things burn. "I study how soot and particulate matter is formed in flames," she explains.

Perched beside her in her laboratory is a machine that will extract samples of gas from the flame periodically, and a mass spectrometer that will give her information about the molecules formed during the combustion process.

The pollutants formed in these fundamental emissions studies, such as soot, carbon monoxide, hydrocarbons and nitric oxides (NO_X), are similarly formed in the combustion process that occurs in car and airplane engines. With greater knowledge about pollutant production, combustion scientists hope to provide clues that will allow engine manufacturers to make the combustion of the future more environmentally friendly.

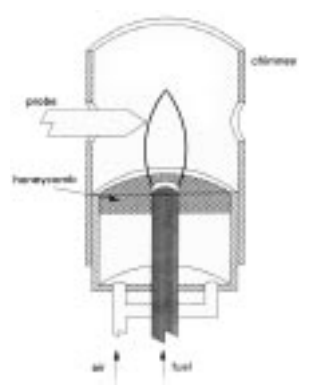

Using a probe, scientists can sample gas from a flame to learn more about the molecules formed during the combustion process. (Graphic: L. Pfefferle)

In your car, says Pfefferle, a catalytic converter tries to remove toxic emissions that have already been produced. "A better solution would be to understand how to prevent the production of a pollutant and design an inherently clean process," she says.

Yale and the University of Connecticut (UConn) play leading roles in fundamental research on combustion. At both institutions, scientists perform studies on burners, complex reacting flow systems, spray flames, and catalytic oxidation and turbu-

(See Combustion, page 2)

Industry A Key Player in Future of Agricultural Biotechnology in CT

Editor's Note: This is the final article in a three-part series on agricultural biotechnology in Connecticut.

Bacon can be delicious. But a pig destined for the breakfast table might bring a farmer only about $40, and who wouldn't rather raise an animal that could be sold for many times that amount—an animal, let's say, that's been genetically modified to serve as an organ donor, and therefore could save lives as well as bring in money.

It's not just pigs that could provide these kinds of double-barreled benefits. Agricultural biotechnology abounds in such possibilities: chickens bred to grow in half the time; corn designed to thrive in drought.

(See Ag Biotech, page 10)

CASE Annual Meeting

"The Impact of Computers and Technology on Learning: The past, present and possibilities"

Wednesday, June 7, 2000 from 1:30 – 4 pm
Connecticut Expo Center, Hartford

See page 2 for details

FROM THE ACADEMY

"The Impact of Computers and Technology on Learning" The past, present and possibilities

Shifting focus from "learning to use computers and technology" toward "using computers and technology to learn"

"Where is all this headed and is it good for us and our children?"

Wednesday, June 7, 2000
from 1:30 pm - 4 pm
at the Connecticut Expo Center in Hartford, CT

On June 7, the Academy, in conjunction with Hartford Information Technology Expositions and Conferences (ITEC), will host "The Impact of Computers and Technology on Learning: The past, present and possibilities." Co-sponsored by ITEC, the Connecticut Technology Council, and the Hartford Growth Council Millennium Project, the conference will provide a platform for dialogue and discourse on the changing role of computers in the classroom—and the effect of that change on children and adults alike.

Speakers will include the Honorable Kevin B. Sullivan, president pro tempore of the Connecticut State Senate; Ray S. Perez, Director of K-12 Education, Advanced Distributed Learning, Office of the Secretary of Defense Readiness and Training Office; Clark Aldrich, Research Director and E-Learning Core Topic Leader, the Gartner Group; Richard Schwab, Dean, Neag School of Education, University of Connecticut; and Janice M. Gruendel, Executive Director, Voices for Children. Laura Kent, executive director of the Connecticut Technology Council, will moderate a question-and-answer session.

If you would like to attend, please contact CASE at (860) 527-2161, or acad@ix.netcom.com.

CASE Reports is published by the Connecticut Academy of Science and Engineering, Inc., 179 Allyn Street, Suite 512, Hartford, CT 06103-1422 Telephone and fax: (860) 527-2161. E-mail: acad@ix.netcom.com. **WWW: http://www.ctcase.org.** CASE is a private, nonprofit public-service organization established by Special Act No. 76-53 of the Connecticut General Assembly.

Combustion *(from page 1)*

lence, trying to improve combustion efficiency and reduce emissions. These studies yield information on how fuel flows through engines and form the groundwork for advances in combustion industries.

In Connecticut, there are also multiple companies working towards cleaner and more efficient combustion. Precision Combustion, Inc. (PCI), plans to build the first clean burning engine system, and scientists at United Technologies Research Center (UTRC) in East Hartford are busy improving engines for the aerospace industry.

Since 1986, PCI, a company located in Science Park in New Haven (a R&D/manufacturing technology park) has been developing a clean, catalytic combustion system that can be applied to electric power generating turbines, and engines in the automotive and aerospace industries. These combustion systems rely on catalysts—materials that speed up the combustion reaction and allow particles to be destroyed at lower temperatures—to diminish the pollutants produced.

PCI's Chief Scientist, who invented the company's original catalytic combustor, is none other than Lisa Pfefferle's father, William Pfefferle. The father-daughter duo work together on occasion, writing papers or sharing notes on catalytic combustion, which is another of Lisa Pfefferle's specialties.

"Everything we do is focused on low emission," says William Pfefferle of the work at PCI. "Emissions laws drive the technology." For businesses in the combustion industry, including manufacturers of cars, planes, rockets and turbines, the game is staying ahead of ever-more-stringent emissions laws.

This is why PCI's research has been picked up by Siemens-Westinghouse to create ultra-low NO_X producing gas turbines for electric power generation applications, and why the Ford Motor Company is working to test PCI's Microlith® automotive catalytic converter for its vehicles.

For car engines, this technology would be a tremendous advance. To date, the Microlith has confirmed performance better than California's Ultra Low Emission Vehicle (ULEV) requirements; another technology in PCI's pipeline may be able to meet proposed California Equivalent Zero Emission Vehicle (EZEV) requirements if applied to hybrid electric vehicle applications.

Another company very much affected by emissions regulations is United Technologies Corporation (UTC), whose Pratt & Whitney subsidiary is the leading producer of jet engines and provider of rocket engines and boosters for space shuttles. Hamilton Sundstrand, another UTC company, provides fuel cells for the US space program.

"If you can't build x amount lower than regulations, you can't sell an engine," explains Med Colket of UTRC. Airport regulations, for instance, give combustion research an economical thrust for UTC's subsidiaries, since airlines will have to pay fines at specific airports unless the engines they buy meet emissions rules.

At UTRC, scientists run projects that focus mostly on improving the efficiency of their products, including some which reduce fuel consumption and enhancing operability of aeroengines. They also perform some fundamental studies of chemical kinetics, emissions, and catalytic techniques in order to create better physics-based engine design systems.

However, there is a lot of fundamental research that simply isn't on their company's agenda, but which they would like to see performed. "There are some grand challenges still to be resolved in combustion science," says Med Colket. "There are issues even about fluid flow, which has not been well enough described, as well as about soot production. It has become important to understand the chemical processes in a burner," he continues, "because everything in combustion is coupled to this."

Though this type of fundamental research—like the work done by scientists at Yale and UConn—may be valuable to companies, this is not the type of research that the companies perform themselves. "Most of our research and development work has to be closely coupled with our divisions' products," says Colket, "We can't spend five to ten years researching the fundamentals of a topic. It has to have fairly rapid turnover."

Catalytic Reactor Conversion Effect on Downstream Burning

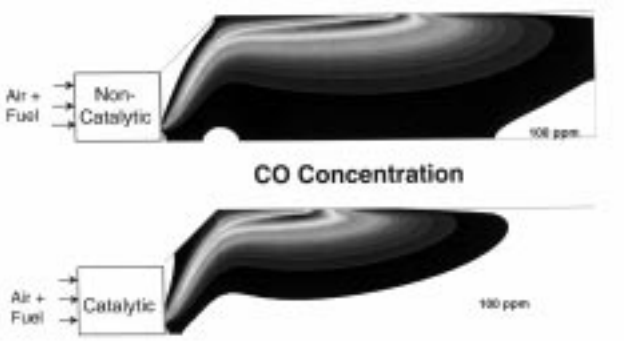

Increased conversion in the catalytic reactor decreases flame length (Graphic: PCI)

So this means it is usually left to academic combustion scientists to make advances in fundamental research, with industry waiting on the sidelines to see what comes out of it all. But with a new initiative from Yale and UConn, industry and university may now be entering into closer collaboration on fundamental research.

A Proposal for a Connecticut Combustion Center

At Yale and the University of Connecticut, not only are many of the professors leaders in the field of combustion science, but at both schools, scientists in mechanical engineering, chemical engineering, mathematics, computer science, chemistry and applied physics are all involved in some way with combustion research.

With such good people working at the two institutions, observes Lisa Pfefferle, "it seems obvious that we should do something to all work together. We've talked for a long time about forming a center." Now it seems this idea is finally taking shape.

This year, scientists from both schools applied to the National Science Foundation (NSF) for funding to build a combustion research center for Connecticut. The center's goal would be to bring together scientists from all combustion-related fields to work on fundamental research, as well as to team up with industrial partners such as UTRC.

"The challenge now, since systems are complex, is to cross boundaries," says Lisa Pfefferle. "Our aim is to be able to interact more productively both inside and outside the university," she explains.

At the universities, scientists will try to create something similar to a think tank atmosphere, where researchers with diverse backgrounds will sit down together periodically to discuss emerging combustion technologies and the results of the center's research, or brainstorm and hypothesize about what comes next in the field.

"If you have people coming at a problem from very different fields, more comes out of the collaboration," says Pfefferle. "Otherwise people carry with them their prejudices. Everyone has their own approaches or favorite techniques. People become technique jocks. They try to find a way to apply their technique rather than to seek out the best technique to solve a problem."

To avoid this narrow-mindedness in both research and education, the proposed center will also set up shared equipment space at Yale and bring combustion laboratories into the same building—allowing for greater interaction between students of different areas of combustion science. "Students …using the same techniques, will be able to teach each other things they wouldn't approach a professor about for fear of seeming stupid," says Pfefferle.

For the proposed Connecticut Combustion Center, two new centralized facilities will be used. To house this new laboratory and equipment space at Yale, a new four-story facility has been proposed. And in order for the groups to cooperate with industry outside the university, a new combustion research facility, funded by a grant from Connecticut Innovations, Inc., is in the final stages of

(see Combustion, page 4)

construction at the University of Connecticut.

This burner facility will be capable of simulating air inlet temperatures up to 1,200°F and combustor inlet pressures of 4 atmospheres (atm) to study complex turbulent reacting flows in a realistic setting for gas turbine combustors. A modern gas turbine operates at pressure levels up to 40 atm and combustor inlet temperatures from 900 to 1200°F. Using state-of-the-art optical laser diagnostics, the combustion and aerodynamic studies that will be performed on this machine include emissions measurements, and mapping of temperature and velocity fields.

"I have been working to build such a facility for many years," says Baki Cetegen, professor of mechanical engineering at UConn and one of the associate directors of the proposed center.

"In the past, we have been interacting with Pratt & Whitney and UTRC in various areas of research. Yet, when it comes to gas turbine combustion studies, we didn't have a suitable facility to allow us to collaborate with them in research. Now, with our new research tools in place, we hope to partner with the gas turbine industry in the future, not only to advance the fundamental combustion knowledge in these complex systems, but also train and educate our students who later become skilled engineers in this important industry."

Membership

The Connecticut Combustion Center will be a membership-based institution with a base fee of $10-15,000 for small companies, ranging up to $100,000 for large ones. Industrial members will have access to university faculty and publications prior to publication, and will be able to participate in laboratory internships, exchanges, and seminars.

Exchanges will be a main goal of the center's Community Outreach Program. Through the center's Industrial Liaison Program, industry will have their employees come to the universities to learn specific skills. For example, industry will send over staff to learn from one of the experts in that area, or perform research experiments cooperatively.

"The benefit [for us] is not only the interaction with professors, though," says Colket. "We also hope to have direct access to their students, either to have them come work up here or to work with us at a later date. We expect to have a program to bring students in for summer positions, and Pratt & Whitney has shown an interest.

Funding

The NSF center funds the group has applied for are 10-year grants intended to accelerate technological innovation in engineering, and encourage new strategies in research and education. Though the grants are competitive, organizers are hopeful the center will be approved.

However, the same group tried for the NSF center in 1995, and wasn't selected. At that time, however, says Sandro Gomez, assistant center director and professor of mechanical engineering, the group wasn't as successful recruiting the matching funding from industrial sponsors that NSF requires. Though the centers are catalyzed by NSF funding, they are intended to be supported primarily by center members, including the universities themselves and their close industrial partners.

"Yale has been quite forthcoming, in fact generous, with the building space," says Gomez. Should the NSF funding come through, Yale has authorized up to $1,000,000 for equipment and personnel for each of the first five years of the center's existence; this is in addition to 25,000 square feet of new building space intended as shared laboratory space for faculty and postdoctoral students.

However, much of the money that will finance the center will come from industry. The two major US jet engine manufacturers, General Electric (GE) and United Technologies Corporation (UTC), will both be major sponsors of the center. GE also produces gas turbines for power plants, and is interested in the center's research in this area, while other companies such as GM (Carmine), which makes diesel engines, BMW, Exxon, and Siemens-Westinghouse are interested in cleaner, more efficient combustion for their products.

What comes out of this funding is often more than what goes in, notes Colket, which is another reason why so many companies are interested. "By working with Yale and UConn," he says, "the return we will get on our money spent on [fundamental] research multiplies several times. There is an amplification of dollars since they are getting funding from other sources as well."

Closer cooperation between the state's university and industrial combustion engineering communities now awaits an NSF decision, expected in mid-May. "If it comes together it would be very exciting to interact with them more broadly, rather than just one-on-one consulting," says UTRC's Colket.

If the funding does not come through however, not all is lost. The UConn facility will still provide a closer cooperation with industry. "There will be funding still," says Colket, "but not to the same magnitude as if the CCC is approved."

"The team that we've put together is a first class team," says Baki Cetegen. "That, combined with the industrial support and the possibility for students to learn about the technology from the people who really make it happen, has the potential of leading to very interesting vistas and new technologies."

"You hear about new alternative energy sources all the time," says Gomez, "so to the average ear it may sound like combustion is passé. But unless there is a major breakthrough, we will have to continue with combustion, making it cleaner and more efficient. There are no alternatives to jet engines for propulsion. Combustion is a huge industry that will be around for at least the next 100 years. This is the time to make breakthroughs in engineering, because all of the elements are in place. If we work tightly together, who knows what will come out of it."—

Deanna Nass, science writer

IN BRIEF

IN BRIEF

Communication

PICK A PLATFORM. With funding from the National Institutes of Health, **University of Connecticut** computer science and engineering professor **Dong-Guk Shin** is attempting to develop a mechanism that allows researchers and scholars to gain access to databases available through the Internet, regardless of user platform. Shin hopes to combine aspects of database systems, artificial intelligence, and user-system design to create "query interfaces"—adapters that enable end-users to surmount the semantic barriers that separate them. Since 1988, his work has been connected to the Human Genome Project, in which much of the research has been conducted in laboratories around the world linked by the Internet.

THE NOSE KNOWS. With chemical sensors made of conductive polymer composites, **University of Connecticut** chemistry professor **Gregory Sotzing** has created an "artificial nose," used to detect diseases by examining a patient's breath. The sensors were designed to "head for the target molecules for these particular diseases," said Sotzing. The molecules produce changes in the sensors, creating a pattern of response unique to each individual odor. "One has to 'train' the electronic nose, much like one trains their own nose to a particular odor," said Sotzing. "The more the nose smells the odor, the more experienced it becomes." Sotzing is currently developing detectors to identify chemical warfare agents, locate land mines, and detect pollutants. He is also working on sensors that can recreate the sense of taste.

COPING WITH STUTTERING. At **Southern Connecticut State University's Center for Communications Disorders**, stutterers are being helped through a blend of techniques that teach them new ways to use their nerves and muscles. "Basically, people who stutter can't keep the forward flow of conversation," said **Paul W. Casella**, a therapist at the Center. The Center uses an eclectic approach that includes slowing down speech and lighter articulation. Stutters are taught, for example, to "pull out," or relax, through a word, and they are also taught to apply these, and other, techniques in conversation.

HOME ALONE. A new device that allows ophthalmologists to monitor a patient's eye pressure throughout the day and away from the hospital has "the potential to completely change the way glaucoma is treated, diagnosed, and monitored," said **Yale** post-doctoral fellow **Marc Abreu**, who developed the equipment. The system consists of two parts: a disposable contact lens with a magnetic strip, and a separate device, about the size of a hand-held tape recorder, that generates an electromagnetic field. This field acts on the lens and obtains a measurement; measurements can be transmitted to the ophthalmologist through the Internet. "The device is planned to provide the doctor with a whole history of pressure changes when the patient is not in the office," said Abreu. It also may be more accurate than other systems because it does not require direct contact with the eye, which can distort the accuracy of the measurements. Abreu's device in currently under development, with clinical trials eventually planned for the United States, Canada, Europe, and Japan.

Education & Cognition

DRILLS FOR SKILLS. Since 1995, therapists at the **Institute of Living** in Hartford have been developing treatments to help schizophrenics manage the cognitive impairments resulting from their disease. These impairments, such as an inability to concentrate, have long been recognized a greater hindrance to daily functioning than the illness's more dramatic symptoms such as hallucinations. The treatment uses drills, exercises, and concrete skills training to reorganize people's minds; some games are similar to those used to retrain the brains of those who have suffered traumatic head injuries. Now, brain researchers at **Yale**, working with Institute clinicians, have used MRI scanning to show how the exercises activate parts of the brain that had been disabled. Ultimately, say the researchers, the MRI brain images could be used to refine the rehabilitation programs to target the cognitive functions most essential for day to day tasks.

~ Correction ~

In a previous issue of *CASE Reports* (Vol. 14,4), an IN BRIEFS item headed "READING REPAIR" read as follows:

"The brains of most impaired readers show a deficiency in the area of the brain called the angular gyrus, according to studies performed by a team that included researchers from the University of Connecticut (UConn) and Haskins Laboratories in New Haven. At a UConn summer workshop, researchers met with teachers to discuss ways that this information could be used to help kids learn to read. The scientists, who pinpointed the problem by taking brain scans of normal and impaired readers, speculate that the angular gyrus may be responsible for translating letters into their sounds, or phonemes; studies are currently underway to determine whether remedial instruction can improve the functioning of the angular gyrus."

The above item was based on a paragraph in an article in the UConn publication, *ADVANCE*, about a UConn-Haskins Laboratories workshop. The *ADVANCE* article (and consequently the *CASE Reports* item) did not state that the research that discovered differences in the angular gyrus of normal and impaired readers was led by the Drs. Sally and Bennett Shaywitz of the Yale University School of Medicine.

PRESCHOOL ADVANTAGE. A **Yale** study has shown that preschool benefits children from middle-income families as well as those from poorer backgrounds. The research, which monitored youngsters who had been predetermined to be at risk for failure, indicated that those who attended preschool were three times less likely to require costly special-education services during kindergarten than those who had not, and that youngsters who did not attend preschool were four times more likely to repeat kindergarten. "The numbers are startling," said Yale professor **Edward Zigler**, who supervised the study. In recent years, the **Connecticut General Assembly** has spent nearly $100 million to expand preschool programs for children in poverty.

SWITCH THINKERS. Memory problems in the elderly may result from their reduced ability to compensate for damage to certain parts of the brain, according to research done by **University of Connecticut** psychology professor **Etan Markus**. The hippocampus, a part of the brain critical for establishing long-term memory, tends to deteriorate with age. In recent published studies, Markus has shown that while middle-aged rats with hippocampal lesions could use visual cues to compensate for the problem, aged animals seemed to lack that ability. Students **Mattison Ward** and **Jonathan Oler** participated in the research, which examined memory for mildly aversive behavior in aged and middle-aged rats.

Items that appear in the In Brief section are compiled from previously published sources including newspaper accounts and press releases. For more information about any In Brief item, please call CASE at (860) 527-2161, write the editors at 179 Allyn St., Suite 512, Hartford, CT 06103-1422, or e-mail us at ctcase@tiac.net.

IN BRIEF

IN BRIEF

UNDER THE SEA. With special equipment unavailable elsewhere in the Northeast, researchers, including both graduate and undergraduate students, will be able to conduct cutting edge oceanographic research at the **University of Connecticut's (UConn's) Department of Marine Sciences** at the **Avery Point** campus. The equipment will be part of a newly established **Suspended Matter Analysis Laboratory**, which is being funded by a $240,000 National Science Foundation Grant. The tools include a particle velocimeter and a total organic carbonizer, which can be used to study the properties of suspended matter and the conditions in which particles move through water columns. These particles include single-celled plants and animals, bacteria, and organic debris, and their behavior is critical to the functioning of ocean biologic processes.

PRESCHOOL ADVANTAGE. A **Yale** study has shown that preschool benefits children from middle-income families as well as those from poorer backgrounds. The research, which monitored youngsters who had been predetermined to be at risk for failure, indicated that those who attended preschool were three times less likely to require costly special-education services during kindergarten than those who had not, and that youngsters who did not attend preschool were four times more likely to repeat kindergarten. "The numbers are startling," said Yale professor **Edward Zigler**, who supervised the study. In recent years, the **Connecticut General Assembly** has spent nearly $100 million to expand preschool programs for children in poverty.

Energy

BIO-PROTECTION. With a grant from the California-based Electric Power Research Institute, **University of Connecticut** professor **Tom Wood** is breeding "good" bacteria that protect power plants from corrosion. According to Wood, microbes typically form a biofilm on the metal surfaces of power plants. These biofilms corrode most metals, including steel and aluminum, and are particular problems for hydroelectric plants. Wood has developed bacteria that can help prevent corrosion by consuming the oxygen that would normally cause oxidation. The bacteria also release an antimicrobial substance that inhibits the growth of other, harmful bacteria. It is estimated that corrosion, a significant cause of catastrophic breakdown, costs the US electric power industry over $10 billion annually.

GETTING AROUND. **International Fuel Cells**, of South Windsor, has announced the sale of a fuel cell system to be used in producing electricity for the Conde Nast building in New York City's Times Square. The system, which cost $ 1 million, generates 400 kilowatts, which accounts for a portion of the power needed to run the 48-story building. The company has also signed contracts with five automakers to supply all or part of fuel cell systems that can power cars. In addition to providing entire power-plants, the company will be furnishing devices such as the reformers needed to extract hydrogen from gasoline, and the auxiliary power unit that runs accessory equipment in the car.

Environment

WEST NILE VIRUS. In the December 17, 1999 issue of *Science,* a team of Connecticut scientists led by **John F. Anderson** of **The Connecticut Agricultural Experiment Station** in New Haven announced the isolation of West Nile Virus (WNV) in the state. The team included scientists from The Station, **Yale University** and the **University of Connecticut (UConn)**. The isolations from 28 American crows and a Cooper's hawk were made in 11 towns in Fairfield and 7 in New Haven county. **Theodore G Andreadis** of The Station wrote **US Senator Joseph Lieberman** that the high mortality in crows and other birds suggests a recent introduction of WNV into populations never before exposed, and raises questions tas to whether the virus will persist, how it will affect humans, birds, and horses, how it will overwinter and what will be its reservoir and vectors. During the winter, The Station, state departments of **Public Health** and **Environmental Protection** and UConn established a system of monitoring; trapping and examination of mosquitoes will begin in June.

ANOTHER NEW MOSQUITO. A new exotic mosquito native to Japan and Korea, *Aedes japonicus japonicus,* has been found in 29 locations in 7 counties throughout Connecticut during a recently completed survey of used tire dumps and other container habitats conducted by **Theodore G. Andreadis** of **The Connecticut Agricultural Experiment Station** and colleagues from **Yale University** and the **Connecticut Department of Environmental Protection**. First detected in July of 1998, this mosquito that bites humans appears well established in Connecticut . It was most likely introduced through the used tire trade. Researchers at the US Army laboratory in Fort Dietrich, MD, found that the new mosquito was a competent vector for West Nile virus.

GET THE LEAD OUT. With the help of the Indian mustard plant, **Trinity College** students were able to reduce levels of lead in a vacant city lot from 1,800 parts per million (ppm) to less than 500 ppm, making the land suitable for residential and agricultural use. The students planted two crops of the plant, which is known to accumulate metals from the soil, over the course of one summer. The plants, including roots, were later harvested, and reduced to ashes, which are considered hazardous waste. The cleanup cost about $25,000 for the half-acre lot, far less than traditional methods, which usually involve removing and replacing the contaminated soil, and typically cost about $200,000 per acre. The work was done in association with a New Jersey-based biotechnology company that is considering commercializing the process.

UNRISKY BUSINESS. A **Yale Cancer Center** study indicates that exposure to DDE, a chemical byproduct of DDT, does not increase the risk of breast cancer in women. After testing the blood of 1,000 Connecticut women, the researchers found no significant difference in the levels of the compounds between those that had cancer and those that didn't. Some had suspected that exposure to the chemical could account for unexplained pockets of breast cancer in areas like Cape Cod. Yale epidemiology professor **Tongzhang Zheng** hopes that this "most recent and conclusive study" will put to rest the notion that exposure to DDE causes cancer. The study also looked at blood levels of PCBs, concluding that these chemicals, too, are unlikely to increase breast cancer risk.

Food & Agriculture

PEST ALERT. To help state residents conquer plant problems, **The Connecticut Agricultural Experiment Station** has published an updated version of its *The Plant Pest Handbook*—on-line. The book, which deals with 247 kinds of trees, shrubs, flowers, fruits, and vegetables, includes, for each plant, a list of problems, along with possible solutions, including many that do not require commercial pesticides. Because printed books become obsolete so quickly, the station was reluctant to put out another edition of the out-of-print classic. But the on-line version can be constantly updated as new information becomes available. Compiled by station scientists **Sharon M. Douglas** and **Richard S. Cowles**, with the help of other station scientists, the handbook is available at www.state.ct.us/caes/.

ANIMAL VACCINES. With a $5.1 million US Department of Agriculture grant, researchers at the **University of Connecticut's**

(UConn) Center of Excellence for Vaccine Research have joined with scientists at the University of Missouri to investigate diseases in cattle, swine, and poultry. Such diseases in farm animals add significantly to industry costs: bovine respiratory tract diseases, for example, account for up to $1 billion in losses to the US dairy sector. The research program aims to develop new methods for vaccine delivery and develop new tools for disease detection. The researchers will also investigate designing antimicrobial compounds to target pathogens, and stimulating animal immune systems to increase the effectiveness of vaccines.

MODEL FARM. With the help of a model designed at the **University of Connecticut (UConn)**, small-scale farmers in El Salvador may be able to increase their earnings by taking advantage of global markets. UConn professor **Boris Bravo-Ureta** developed the model to find a way to provide these farmers with basic technical and economic information that they often lack. The model is being used to help set up five farm management centers. The centers are being established through a UConn partnership with **TechnoServe,** a Norwalk-based consulting firm.

Health

MACULAR TREATMENT. A new drug that may successfully treat some forms of macular degeneration, which is the leading cause of blindness in people over 50, is being tested at the **Yale School of Medicine**. The drug, verteporfin, a photosynthesizing agent, is injected into the patient and then stimulated in the eye by light from a laser. "The laser is weak enough so that it does not damage the retina, but strong enough to activate the medication," said **Daniel Berinstein**, assistant professor of ophthalmology. Once activated, the drug closes the abnormal blood vessels whose leakage can cause blindness. It will be used to treat "wet" macular degeneration, which accounts for 90% of the severe vision loss associated with the condition.

CARPAL TREATMENT. By using an endoscope to treat carpal tunnel syndrome, **Yale** surgeon **Grant Thomson** is able to improve recovery time and reduce the number of complications for patients. Conventional treatment requires a longitudinal incision in the palm of the hand, extended recovery time, and risks complications that can include nerve injury. The single portal endoscopic carpal tunnel release surgery preferred by Thomson requires only a small incision at the wrist. The carpal tunnel is released by inserting an endoscope into this slit. The surgery is performed under local anesthesia. Carpal tunnel syndrome, which results from compression of the median nerve in the wrist, is the most commonly reported nerve problem in the United States.

DOUBLE TROUBLE. An enzyme that could aid in the development of new antibiotics has been found to have the unlikely ability to insert two amino acids, rather than just one, into proteins as they are formed. The enzyme, which belongs to a family known as aminoacyl-tRNA synthetases, is found in extremophiles—microbes that exist under extreme conditions—and may be among earth's earliest life forms. Extremophiles have long been a puzzle because they lack the enzyme that normally adds the amino acid cysteine to a protein. (Proteins consist of linked amino acids.) In work recently reported in the journal *Science*, **Yale** molecular biologist and CASE member **Dieter Söll** determined that cysteine was added by the same enzyme responsible for the amino acid proline. Understanding this enzyme's unsuspected talent could help in the effort to use aminoacyl-tRNA synthetases in producing new anti-infective drugs.

AXON REGROWTH. Yale researchers have identified one of the genes and proteins responsible for preventing the regrowth of brain and spinal cord axons after a central nervous system injury. A study by neurology and neurobiology professor **Stephen M. Strittmatter** demonstrated that, generated in the laboratory, the Nogo protein stops axon growth; the protein is found in those areas of the brain most hostile to axon growth. Strittmatter's team also found that less than 10% of the protein serves as an inhibitor, a factor that should aid in analyzing that crucial piece. "If those inhibitors based on Nogo can be [understood], the failure of axon regeneration and functional recovery and many brain and spinal cord injuries might be reversed," said Strittmatter.

STRESS KILLS. The adrenaline induced by stress can cause sudden death in those susceptible to arrhythmias, or abnormal heartbeats, reported a team of **Yale** researchers headed by **Rachel Lampert**. By inducing stress in patients with implantable cardioverter-defibrillators, the researchers were able to show that the condition causes arrhythmias that are faster, harder to terminate, and, therefore, potentially more deadly. "We did not see evidence of lack of blood flow to the heart," said Lampert. "This suggests that the changes were due to shifts in the heart's electrical system caused by stress." Adrenaline, explains Lampert, alters a heart's electrical system. The team will look at clinical implications of these findings: for example, the possibility of using mental stress as a way of identifying patients at risk for arrhythmias.

IMPROVED TEST FOR DOWN'S. A new screening test that assesses the probability that a fetus will have Down's Syndrome may offer an 80% accuracy rate, as opposed to the 60% accuracy provided by the triple blood screen test most commonly used. Developed at **Yale**, the modified urine pregnancy test, which detects a protein hormone called hyperglycosylated hCG, is undergoing clinical trials. The higher accuracy of the screening procedure means that fewer women would have to undergo amniocentesis to determine whether or not their fetus has the genetic abnormality. "Between 60 to 100 amniocenteses now are performed to identify each case of Down's Syndrome," said **Ray Bahado-Singh**, of the **Yale School of Medicine**, one of the principal investigators for the trials.

High Technology

SOUND PROCEDURE. Ultrasound procedures used by **Yale** researchers provide doctors with a way to detect fetal anemia using a non-invasive technology. Traditionally, the condition, which could be fatal if left untreated, is diagnosed with methods like amniocentesis and cordocentesis, which also carry a risk of death. The Yale method, which can be performed in three to five minutes, uses Doppler ultrasound to measure blood flow velocity, and so is able to detect anemia without threatening either mother or child. Researchers, led by Yale obstetrics and gynecology professor **Giancarlo Mari**, have shown that blood flows more quickly than normal in anemic fetuses. In addition to being safer, the procedure is cheaper, with the potential of saving $50 million each year in the United States alone, according to Mari.

GUN SAFETY. Velcro is the key to protecting children from handguns, in a safety device invented by a group of **Yale** students. Gun Guard consists of a Velcro band wrapped around the gun and attached to a piercing alarm. If the gun is moved a few degrees up or down, a movement switch activates the alarm, alerting any adults that might be in the house. An advantage of Gun Guard, according to Yale lecturer **Henry Bolanos**, who taught the course in which the product was designed, is that it protects children without requiring that the gun be disarmed: most gun owners who want their weapons readily available keep them loaded, in the bedroom. The students, who are continuing to develop their product, hope to put Gun Guard on sale this summer.

IN BRIEF

IN BRIEF

CANDID CAMERA. Using x-ray crystallography, **Yale** scientists were able to catch an RNA polymerase in the act of copying DNA into RNA: a key step in creating the proteins used in running a cell. "These are the first insights into how RNA polymerase initiates transcription and how the transcription is regulated," said CASE member and Yale biophysics and biochemistry professor **Thomas Steitz**. "What we have is view of the enzyme copying the DNA into RNA. We have a crystal structure of the enzyme at the initiation of the transcription with the enzyme bound to a promoter DNA. That's the signal of where to start the copying. We also have the structure of an initiation complex after the enzyme has synthesized a trinucleotide RNA. We can actually see the dynamic process from these two snapshots and understand what's happening." Steitz's work resolves key questions as to how polymerase functions.

CHECKERS. A disc-like device three inches in diameter could screen thousands of potential drug compounds quickly and economically. Developed by New Haven's **Alexion Pharmaceuticals**, in conjunction with Boston University, the desktop tool will help researchers see how organic molecules react to each other, a previously cumbersome task requiring much space and equipment. Alexion's system relies on a silicon disk etched with tens of thousands of micro-wells into which samples of compounds can be dropped. During a recent test, some of the wells were filled with an antigen solution; a robotic arm then dropped in different antibodies, which had previously been modified to glow if a reaction occurred. A fiber optic system then checked each well for a response.

INNER GUIDANCE. With the help of a tool that combines endoscopy with ultrasound, doctors at **Hartford Hospital** are able to diagnosis patient problems with far more accuracy. Doctors change their decisions about how to treat patients in up to 70% of the cases where endoscopic ultrasound (EUS) is used, said **Michael Karasik**, a gastroenterologist at the hospital. The device consists of an ultrasound probe attached to the tip of an endoscope, a tube with a tiny camera at the end. With an endoscope alone, physicians are able to examine the surface (wall) of patient's internal organs. But with ultrasound added to the mix, the doctors are able to check behind those walls. They can, for example, measure the size of a tumor, and "see" whether it has spread, eliminating, in some cases, the need for exploratory surgery.

Industry

AS YOU LIKE IT. Researchers seeking to repeat or expand on work conducted at **Yale** can obtain the biologic reagents they need quickly and easily, thanks to a Yale agreement with Science Park-based company **Recombinant Technologies LLC (RT)**. The company, founded by Yale scientist **Pazhani Sundaram**, will identify Yale reagents of commercial value, producing and shipping them quickly to other workers in the field. Because of its connections to the academic community, Sundaram points out, RT can have reagents ready even before the research involving them is published.

E-CLASS. E-commerce classes at the **University of Connecticut** have been filled to capacity during the two years they've been available, according to professor **James Marsden**, and the university is now considering offering an E*MBA program. Other state schools, including the **University of Bridgeport** and the **University of Hartford**, plan to offer similar opportunities, providing classes, concentrations, and centers devoted to this burgeoning field. Courses often include Internet-based marketing, new Internet-based technologies, and phone and cable-based commerce.

BOOMER ALERT. An insurance model being developed by two **University of Connecticut (UConn)** doctoral candidates in actuarial science is expected to help insurance companies determine fair prices for long-term insurance coverage. According to **Jay Vadiveloo**, head of the actuary department at **Aetna Financial Services** and an adjunct professor at UConn, it is difficult for companies to properly price long-term care insurance because of inadequate actuarial data for older people, especially as improvements in medical technology lengthens nursing home stays. For example, he says, preliminary results from the model indicate that costs to insurance companies may be as much as four times higher than their own estimates. The research, which will take about a year to complete, is expected to lead to a marketable product.

RISING ABOVE THE COMPETITION. With a slimmed-down organizational structure and a drastically changed elevator system, **Otis Elevator**, based in Farmington, hopes to gain an advantage over its competitors. The new Gen2 elevator relies on flexible steel-reinforced belts instead of the traditional stiff metal cables to move elevators. The system allows for smaller pulleys and motors, and permits components to be mounted inside, eliminating the need for a bulky machine room at the top of the elevator shaft. Analysts believe that the industry as a whole is moving toward eliminating machine rooms. Otis's new system can work in buildings of up to about 20 floors, and the company is working to increase that range.

Transportation

UNDERCOVER UNDERWATER. Electric Boat has won a Navy contract to upgrade the *USS Jimmy Carter*, a Seawolf submarine under construction at the company's **Groton** shipyard. The modifications, expected to cost about $887 million, will equip the boat for special operations such as tactical surveillance, mine warfare, special warfare, and advanced communications. One unique feature, a flexible ocean interface known as a "wasp waist," will enable the Navy to deploy and recover various payloads without using torpedo tubes. The upgrade, which will increase the boat's total cost to $3 billion, is scheduled for completion in 2004.

TRAIN TRACKS. Metro-North commuter trains now carry recording devices similar to the flight data recorders used on airlines. The equipment registers data such as speed, brake pressure, signals, heating and cooling function, distribution of electricity, and performance of car doors. The devices, which are mandated by the federal government, were installed over a period of several years at a cost of $13 million. According to Marjorie Anders, a Metro-North spokesperson, they are used for troubleshooting, and as a maintenance tool. Each train contains at least one device, Anders said.

AT LAST! Amtrak's long-awaited, electrically-powered trains are finally shuttling passengers from Connecticut's shoreline to points north and south. The **Acela Regional** trains, traveling at up to 120 miles an hour, make the trip from New York to Boston in four hours, cutting about 90 minutes from the journey. The trains, which make stops in Stamford, New Haven, and New London, are powered by an overhead electrical system installed at a cost of $650 million.

HIGH FLYER. Sikorsky Aircraft, based in Stratford, recently received its first order for the new S-92 helibus. Five of the 19-seat transports were ordered by Cougar Helicopters, an offshore oil operator that will use the aircraft to support operations based in Eastern Canada, including Newfoundland and Nova Scotia. "Cougar makes an ideal launch customer for us," said **Tommy Thomason**, a Sikorsky official, pointing out that "they will put the aircraft to the test," with very high utilization and actual icing conditions. The S-92 is powered by two **General Electric** turboshaft engines.

— Compiled and edited by Karen Miller

And the winners are…

Talented Young Scientists Receive CASE Awards at CT State Science Fair

Once again this year, CASE provided awards to the two top winners of Connecticut State Science Fair in the senior divisions of Biological Sciences and Physical Sciences. The recipients each received a certificate and a $300 honorarium; these honorariums are drawn from a fund supported entirely by the members of the Academy. The winners are also invited to present their projects at the CASE Annual Meeting on June 7.

The 2000 Connecticut State Science Fair was held March 14–18, 2000 at Quinnipiac College in Hamden, Connecticut. In May, the top four winners of the state fair will go on to the 2000 Intel International Science and Engineering Fair (ISEF) in Detroit, where they will compete with over 1,200 students from 48 states and 40 nations for scholarships, tuition grants, internships, scientific field trips, and the grand prize: a trip to attend the Nobel Prize Ceremonies in Stockholm. Below are the abstracts of the two winning projects.

First Place, Senior Biological Sciences

"A MODEL OF EMBRYONIC CELLULAR MORPHOLOGY: EXPLORATIONS OF A TWO-DIMENSIONAL CELLULAR AUTOMATON"

John J. Shedletsky, Brewster High School, Brewster, NY*

Much is unknown about the mechanisms that are responsible for the development of a morulan embryo, a small ball of undifferentiated cells, into a morphologically developed organism with a vast number of highly specialized cell bodies. A prevailing theory for the past five decades, supported by mathematician Alan Turing, is that differentiation and the introduction of large-scale structure are the effects of local concentrations of chemicals, known as morphogens. Turing's theory of chemical morphogenesis asserts that a system must meet three requirements for the morphogens to be able to influence the creation of structures: (1) There must be two or more chemical species, (2) These chemicals must diffuse at different rates, (3) They must be able to interact with each other.

A computer simulation of morphological development of a cellular automaton that fulfills Turing's three requisites has been constructed. Turing hypothesized that such a system would operate in a manner analogous to the actual process of morphogenesis. The results present strong evidence towards the validity of Turing's postulates, at least within the context of the model. Specifically, the optimum rates of diffusion for each of the morphogens for the purpose of cell differentiation and structural development have been determined. Also, the effects of differing initial conditions, such as chemical decomposition rates and specialization thresholds, have been assessed in terms of how well they promote both these occurrences. It is hoped that the results of this research will provide unique insights to biologists attempting to uncover the secrets behind morphological development.

**Students from Brewster, NY and Fishers Island, NY are eligible to compete in the Connecticut State Science Fair because those regions, which aren't covered by New York state regional fairs, were added to the CT State Science Fair's charter several years ago.*

First Place, Senior Physical Sciences

"LASER-INDUCED FLUORESCENCE TO DETECT AND QUANTIFY MOTOR OIL CONTAMINATION IN SOIL AND WATER"

Robert W. Mulcare, Greenwich High School, Greenwich, CT

The detection of motor oil contamination in the environment is important in maintaining a balanced ecological system and securing the safety and health of human populations. In this research, a bench-top spectrometer was developed using a green helium-neon laser (543 nm). It was evaluated as an instrumental approach for the detection and spectral analysis of the laser-induced fluorescence produced by several common motor oils. Motor oil was determined to have a unique, highly characteristic fluorescence spectrum peaking at 590 nm when excited with the green helium-neon laser. A motor oil extraction procedure from environmental mediums using hexane was developed, and the effectiveness of the procedure was confirmed using laser-induced fluorescence. Fluorescence signal intensity was shown to vary in direct linear proportion to known quantities of motor oil in samples. Real environmental samples collected from locations susceptible to motor oil contamination often exhibited the characteristic motor oil fluorescence spectrum. Other environmental samples did not exhibit any identifiable fluorescence signal, indicating that the characteristic motor oil fluorescence was not produced by a substance inherent in soil or water.

This laser-induced fluorescence approach to motor oil detection can be utilized to identify sites requiring bioremediation or in continuous monitoring at active sites that are susceptible to spills. A practical and portable field instrument may be feasible using a green diode laser and color bandpass filters.

Robert Mulcare of Greenwich High School with his award-winning project on laser-induced fluorescence. (Photo: R. Mulcare)

Companies that develop these high-value crops are, many believe, just what Connecticut needs in order to participate in the economic growth offered by the burgeoning biotechnology sector. While Connecticut has lagged behind its neighbors in entering this fast-paced field, the state has begun to push forward, with tax initiatives that allow for the fact that some companies must invest huge sums of money before seeing any profits, and with loans that help them finance the space they desperately need. The state's universities, too, are becoming more aggressive in turning basic research to economic advantage. And the companies themselves are urgently working to develop viable, and—with luck—extremely profitable products.

An Ambitious Xenotransplantation Initiative

Take Alexion Pharmaceuticals, a New Haven-based company that could almost be considered a prototype for the kind of human therapeutics and agricultural biotechnology firm that the state hopes to encourage. Started in 1992 with just five people, the company now employs about 95. Alexion is designing treatments to halt the damage done by heart attacks and to fight autoimmune diseases like lupus. And, under the guidance of Dr. William Fodor, the company is attempting an ambitious xenotransplantation initiative—an effort to use transgenic pigs as tissue and organ donors. The need is great: several thousand people die annually waiting for organ transplants, and, according to company figures, the demand for transplants is growing 15-20% a year. In addition, the number of patients that would benefit from cell or tissue transplants, such as Parkinson's disease patients or spinal cord injury patients, is even greater.

Pig organs are considered prime candidates for xenotransplantation: they closely resemble human organs in many ways. And, more recently, it's been found that certain specialized pig cells, transplanted into humans, could treat serious central nervous system disorders, like Parkinson's disease and spinal cord injuries.

The problem is: the human immune system quickly recognizes transplanted pig cells as intruders. "When you put the human immune system in contact with a foreign cell—in this case, a pig cell—the immune system essentially destroys the cell in a very short period of time," explains Fodor. The foreign cells, he says, trigger an antibody and complement reaction—a series of enzymatic reactions that eventually tears the invader apart. "It'll actually punch a hole in the cell, so that everything leaks out."

That's good, when the immune system uses its power against harmful microbes. But it also means that before doctors can use pig organs, cells, or tissues to treat humans, the immune system must be blocked. Stopping it can involve dosing the patient with immunosuppressant drugs, or cleansing the bloodstream of antibodies. But these solutions create serious problems of their own. Alexion has attempted a different approach. Instead of treating the human, the company treats the pig.

"What we have to do." explains Fodor, "is modify [porcine] cells so that they're essentially invisible to the human immune system." The company has done this with two genetic alterations. First, it has engineered pig cells to express the complement inhibitor CD59. Not normally found in pigs, it is one of the key molecules used by human cells to protect themselves from complement enzymes. It prevents the enzymes from linking up, or polymerizing, which they must do in order to punch holes in a cell. CD59 works as a kind of shield.

Alexion's second modification works as a kind of disguise. Pig cells, Fodor explains, carry on their surface a carbohydrate known as alpha-galactose. Because human cells don't express that particular molecule, its presence is a sign by which the human immune system recognizes an intruder. Alexion has bioengineered pig cells that produce less alpha-galactose. Elegantly, the researchers have modified the pig cells with a human enzyme that prevents the formation of alpha-galactose by using up a necessary ingredient, the substrate. Even more neatly, the human enzyme, H-transferase, uses the substrate to make an O blood-group antigen. Since O is a universal donor, this means that H-transferase pig cells will be accepted by humans of all blood types.

Currently, Alexion is working to increase the level of H-expression, to get the alpha-galactose down even more, and to add more complement inhibitors. "When you do a whole organ transplant," Fodor explains, "it's constantly bombarded by antibody and complement. One complement inhibitor gets overwhelmed. You need multiple inhibitors."

But organ transplants are just one potential use of the technology. If pigs can be bioengineered to resist the human immune system, then they can provide specialized cells useful in treating central nervous system disorders, like Parkinson's disease, and spinal cord injuries. In fact, says Fodor, it may be easier to develop xenotransplantation treatments for nervous system defects than for whole organs. The central nervous system, he explains, is an "immune privileged site." It's not exposed to blood, or complement enzymes, on a constant basis, as most organs are. "When you're behind the blood brain barrier," says Fodor, "you might be able to perform fewer engineering modifications to get the cell to engraft."

The company is, according to Fodor, already developing a treatment that could prevent deterioration and, possibly, restore feeling, in those paralyzed by spinal cord injuries. Scientists are working with cells that will "ensheathe" severed nerve cells when implanted into test animals and allow the nerves to transmit electrical signals once again. Alexion is also working on a treatment for Parkinson's disease, which results when brain cells stop making the neurotransmitter dopamine. They've shown that donor cells will establish themselves with the host brain, producing the dopamine that Parkinson's patients lack.

"What we want," says Fodor, "is to come up with therapies for patients that require transplantation and for which

there are no viable treatments available to treat the disease."

Breeding Better Chickens

Industry scientists do not even need to perform genetic engineering to use biotechnology in developing high-value products. Arbor Acres is one company that, since 1923, has relied solely on classical breeding to improve its product. Even so, the Glastonbury-based business, which breeds broiler chickens, believes that molecular techniques can speed its progress.

At Monsanto, research focuses on functional genomics and bioengineering. (Photo: Monsanto)

The company distributes broilers internationally, and of the 46.5 billion broilers consumed every year around the world, says Director of Genetics Harris Wright, about 20% come from Arbor Acres stock.

Every generation is an improvement on the old, says Wright. "Five years ago, you're looking at males [in this breed] weighing 2250 grams, and female weighing 1850. Today, we're looking at males that are 2500 and females that are 2100. Today, we're looking at birds that, for every pound of body weight, consumes only 1.75 pounds of feed. And actually, that's going down extremely rapidly. We have, biologically, birds that are able to do about a pound and half of feed to a pound of gain. In the 1960s, it took 12 weeks to get a chicken the weight we get it to in 5 1/2 weeks today."

The company painstakingly tracks each of the birds in its breeding stock, looking for qualities such as growth and yield rates. Then it uses aggressive selection to foster the traits it seeks. "Out of a hundred birds," explains David Harry, a molecular geneticist at the company, "you might keep five."

Most of the qualities that the company wants can be found by assessing the live bird. But some traits remain less obvious. Take disease resistance. "In order to assess whether these birds are resistant," explains Harry, "you have to expose them to the pathogen. And yet, once we expose them, we cannot utilize those birds." Even if the birds remain healthy, there's still a chance that they could be carriers. But if Harry and his colleagues can find a genetic marker that correlates with disease resistance, then they can identify the birds they need simply by checking for the appropriate marker.

A marker is a heterozygous allele—a chunk of DNA in any given part of a chromosome in one line of birds that is different from the DNA chunk on the same part of the chromosome in any other line of birds. It's as if, for example, a waiter brought you soup, salad, fish, and dessert for dinner every night. If sometimes the fish were salmon, and sometimes it were trout, that would be like a pair of alleles. And if, whenever you had salmon, cherry pie showed up for dessert, then salmon could serve as a marker—or predictor—for cherry pie.

He is not, Harry emphasizes, studying genes—just correlations. "In all practical purposes," he says, "we're working in ignorance of gene function." He is simply looking at pieces of DNA. "Even if we find an association, we're making no claim that it has a functional relationship with the markers. All we are saying is that individuals who have inherited this piece of chromosome have more or less susceptibility to this [quality.]"

Right now, the company is mounting an effort to identify markers connected with useful traits. Building on research generated in such venues as the Avian Disease and Oncology Laboratory (ADOL) in Michigan, Harry has already found several possible candidates. "We are to the stage now of asking: what are the strings of associations?" They have, he says, some suggestions of correlations.

Even with the markers, the company will continue its detailed physical evaluations of growing birds. "What we want to do is to layer molecular data on top of those evaluations," Harry explains. The essence of the program, he notes, is to use markers to accelerate classical breeding. It's possible, he adds, that Arbor Acres could be utilizing marker selection in some form within the next two years.

Transcriptional Profiling

At Monsanto's Mystic research campus, the search for high-value products centers on corn. "We study the genome," says Site Director Tom H. Adams.

The Mystic group, he explains, has undertaken two missions. It focuses on functional genomics—understanding what a gene does—and on using that information to bioengineer new lines of corn. Like the scientists at Arbor Acres, Monsanto researchers use markers to track traits. "The sort of thing [we follow] would be resistance to a particular disease, or improving the quality of the grain so that it has, for example, higher oil content so that it's a better feed for chickens."

But the corn genome has been researched far more thoroughly than that of poultry. While it has not been completely decoded, "there are thousands of genes known in corn," says Adams. The researchers at Mystic use a technology known as transcriptional profiling to understand what those genes do.

The chain of DNA molecules that comprise a gene express, under certain conditions, the proteins needed by a cell to perform various functions. But it's not obvious from a simple listing of DNA pairs which protein a gene produces, when, and why.

Transcriptional profiling helps answer those questions by letting scientists look at the expression of all the genes in an organism at any given time. "This is a technology that's been developed over the past four or five years," explains Adams. It involves placing all the genes from an organism on some type of matrix such as a chip or a membrane. Then, explains Adams, you take the RNA from a plant that's in the state you want to

(see Ag Biotech, page 12)

study—maybe it's about to flower, for example. RNA is used by the cellular DNA to produce proteins. So, Adams says, "by using that RNA to probe the matrix, you can look at the amount of expression of every single gene in the organism under different circumstances." That allows researchers to make correlations between gene expression and particular traits. "It gives us information about what genes might change in association with a trait. It provides a hypothesis about how to alter that trait."

For example, Adams explains, one of Monsanto's ongoing goals is to increase yield. "Our primary work," he says, "has been around water relations." Plants need water not only for photosynthesis, but also for transpiration, to keep cool. When a plant lacks water, it starts shutting down certain processes. Even when there's not a serious drought, he adds, there's not always an ideal amount of water available. If researchers can find a way to enable even a plant that lacks sufficient water to maintain photosynthesis, that could have a significant impact on yield.

"One way to associate genes with functions," explains Adams, "is by taking a corn plant and stressing it and seeing what genes are activated in response." To study drought, you might deprive a plant of water, and then see, through transcriptional analysis, which genes become active. "What one would ultimately like to do is to analyze the function of a gene in corn, and see whether you can cause it to be expressed differently." If there's a gene whose expression is induced by drought, and that gene helps the plant cope, then what would happen if you caused that gene to be induced before the water shortage occurred? That, says Adams, is the type of question you'd like to ask.

The company does not, he notes, automatically turn to genetic engineering to improve its product. "First, we identify the trait we're interested in. Then, we decide if we can add that to the plant through breeding. If we can't, we look for some gene we can change the trait with, and move it into the plant in some way."

The Monsanto scientists could use a microbe to carry in the extra DNA, or they could bombard the plant with the desired gene, using a gene gun. "Either or both approaches might be taken," says Adams. There can even be a choice of which gene to use. They might, for example, choose to insert a gene from a microbe even though a corn gene produces an equivalent enzyme. "Corn and other plants have properties which sometimes make it difficult to change the expression of the corn gene." There can be, he explains, internal control mechanisms—gene silencing, for instance, where, when a gene is expressed more strongly, the plant responds by turning that gene down. "That's done more if [the plant] recognizes that it's got a copy of its own gene, rather than if it's something new that's been introduced."

"One has to recognize that the product cycle of corn is fairly long," explains Adams. "The fastest you can really grow corn is about three generations per year." Still, he says, some of the traits related to quality are quite far along, and he expects that the biotechnology-driven products that Monsanto currently has under development will reach the market within the next ten years.

A Potential Winner

Monsanto is not alone in looking at such long lead times: that's typical of biotech products. Start-up biotechs can expect to struggle for about fifteen years before turning a profit. The field itself is only a few decades old: its potential, both economic and scientific, is just beginning to be tapped.

In Connecticut, growth in the biosciences, including agricultural biotechnology, is picking up. According to Connecticut United for Research Excellence (CURE), between 1995 and 1998, bioscience R&D spending in the state increased 46%, with employment rising 29%.

For these companies, and, perhaps, for Connecticut as well, getting there first may be the key to success. "If you're trying to beat your competition," says Dr. Wright, "that's the name of the game: how fast can I make improvements. If I can beat my neighbor, if I can be faster, more economically, I'm going to be a winner."***—Karen Miller, science writer***

CASE REPORTS

CONNECTICUT ACADEMY OF SCIENCE AND ENGINEERING
179 ALLYN STREET • HARTFORD, CT 06103

NON-PROFIT ORG.
U.S. POSTAGE
PAID
HARTFORD, CT
PERMIT NO. 751